ELECTRICAL CONNECTION (WATER SUPPLY)

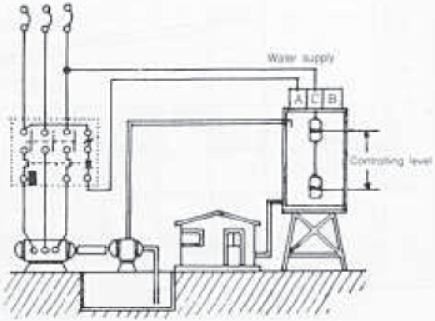
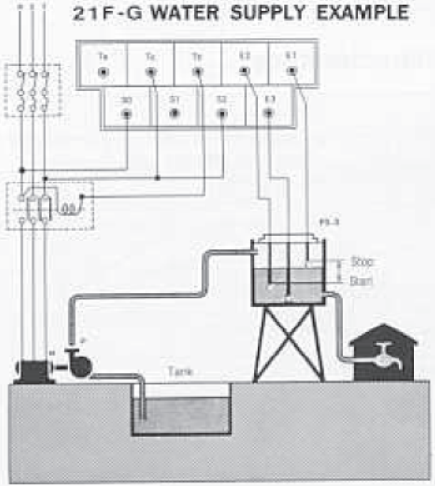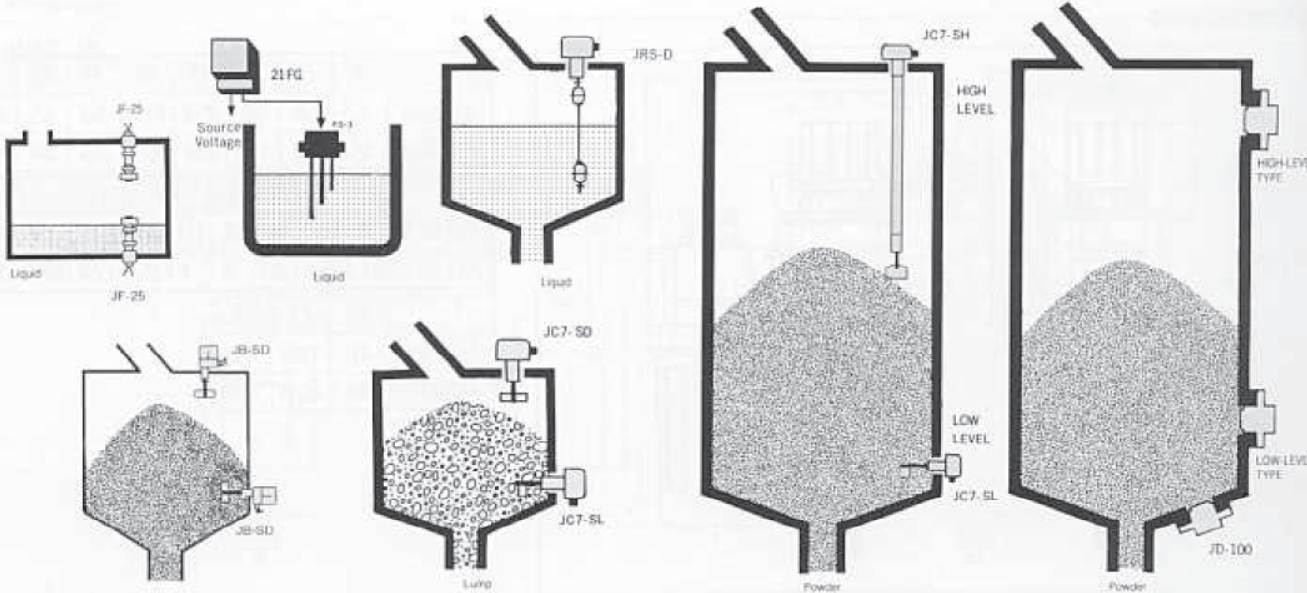
21F-G WATER SUPPLY EXAMPLE